WL40-445BL16

NEOMOUNTS WL40-445BL16 TV WALL MOUNT 43-75" - FULL MOTION - 90° SWIVEL

SPECIFICATIONS

GENERAL

Min. screen size*	43
Max. screen size*	75
Min. weight	0
Max. weight	45
Max. weight curved/ultra-wide	45
Screens	1
VESA maximum	600x400 mm
VESA minimum	200x200 mm

FUNCTIE

Type	Tilt Swivel Full motion
Depth adjustment	8,45 - 108,25
Tilt (degrees)	+12°, -2°
Swivel (degrees)	+90°, -90°
Height	44.2
Width	65
Depth	108.3

INFORMATION

Color	Black
Main material	Steel
Warranty	5 year

*Please note: The inch sizes stated are just an indication, combined with the weight and VESA sizes. The maximum weight and VESA size are absolute restrictions for the products and should not be exceeded.

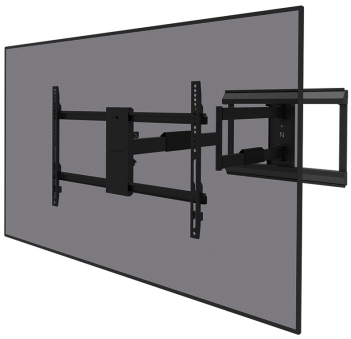



Neomounts WL40-445BL16 TV wall mount - 43-75" - 90° swivel - max 45 kg - 14° tiltable - VESA 200x200-600x400 - EasyAdjust - black

The Neomounts WL40-445BL16 is a full-motion TV wall mount designed for screens from 43" up to 75" with a maximum weight capacity of 45 kg. Featuring an impressive extension range from 84.5 to 1082.5 mm and a total swivel range of 180° (90° left and 90° right), it offers complete freedom to extend and turn larger TVs around corners to achieve the optimal viewing angle from anywhere in the room. This exceptional reach and flexibility make it an ideal choice for living rooms, larger living spaces, and commercial environments such as reception areas.

Built from durable steel with a refined matte black powder-coated finish, the mount offers +12° to -2° tilt movement with an integrated handle for effortless adjustment. The integrated EasyAdjust system (±3°) allows you to easily level your TV, even after extending or swivelling the arm. Supporting VESA patterns from 200x200 to 600x400 mm, the WL40-445BL16 delivers a robust, sleek, and highly adaptable mounting solution for larger displays.

WL40-445BL16

NEOMOUNTS WL40-445BL16 TV WALL MOUNT 43-75" - FULL MOTION - 90° SWIVEL

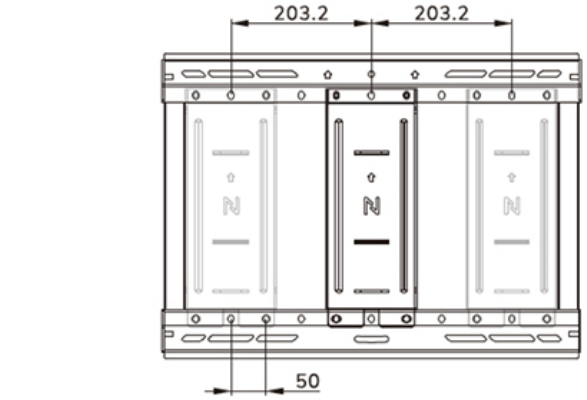

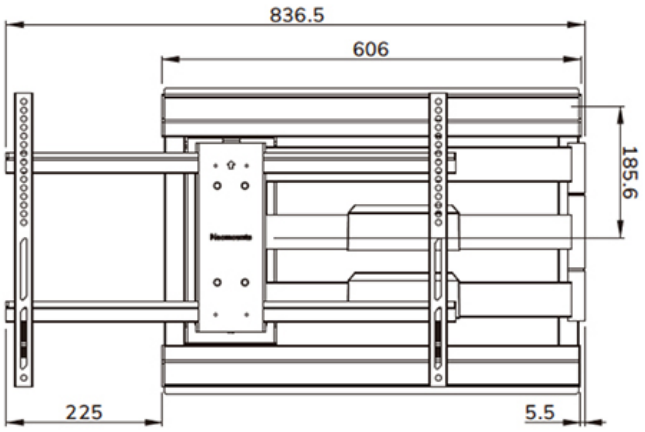

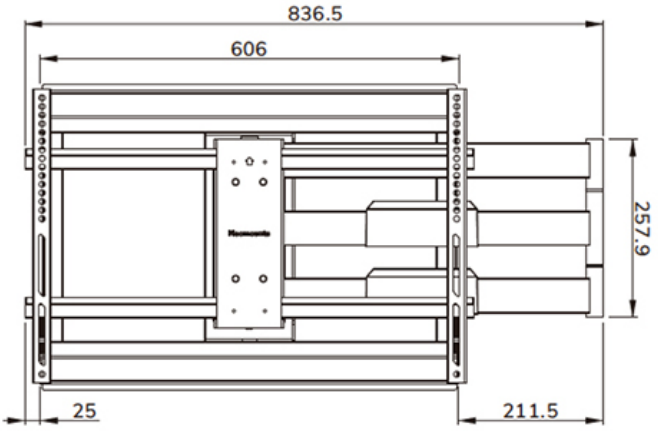

Neomounts

Measuring unit: mm