WL40-445BL14

NEOMOUNTS WL40-445BL14 TV WALL MOUNT 32-65" - FULL MOTION - 90° SWIVEL

SPECIFICATIONS

GENERAL

Min. screen size*	32
Max. screen size*	65
Min. weight	0
Max. weight	25
Max. weight curved/ultra-wide	0
Screens	1
Distance to wall	5,85 - 67,5
VESA maximum	400x400 mm
VESA minimum	100x100 mm

FUNCTIE

Type	Tilt
	Swivel
	Full motion
Depth adjustment	5,85 - 67,5
Tilt (degrees)	+12°, -2°
Swivel (degrees)	180°
Height	43,3
Width	43,3
Depth	67,5
Pivot points	3

INFORMATION

Color	Black
Main material	Steel
Warranty	5 year

*Please note: The inch sizes stated are just an indication, combined with the weight and VESA sizes. The maximum weight and VESA size are absolute restrictions for the products and should not be exceeded.

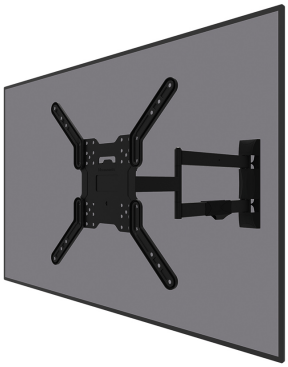



Neomounts WL40-445BL14 TV wall mount - 32-65" - 90° swivel - max 25 kg - 14° tiltable - VESA 100x100-400x400 - EasyAdjust - black

The Neomounts WL40-445BL14 is a full-motion TV wall mount designed for screens from 32" up to 65" with a maximum weight capacity of 25 kg. Featuring an impressive wall distance extension ranging from 50.5 to 670.5 mm and a total swivel range of 180° (90° left and 90° right), it gives you complete freedom to extend and turn your TV around corners to achieve the optimal viewing angle from anywhere in the room. This exceptional flexibility makes it an ideal choice for living rooms, bedrooms, and commercial spaces such as reception areas.

Built from durable steel with a refined matte black powder-coated finish, the mount offers +12° to -2° tilt movement with an integrated handle for effortless adjustment. The integrated EasyAdjust system (±3°) allows you to easily level your TV, even after extending or swivelling the arm. Supporting VESA patterns from 100x100 to 400x400 mm, the WL40-445BL14 delivers a reliable, sleek, and highly adaptable mounting solution.

Neomounts®

WL40-445BL14

NEOMOUNTS WL40-445BL14 TV WALL MOUNT 32-65" - FULL MOTION - 90° SWIVEL

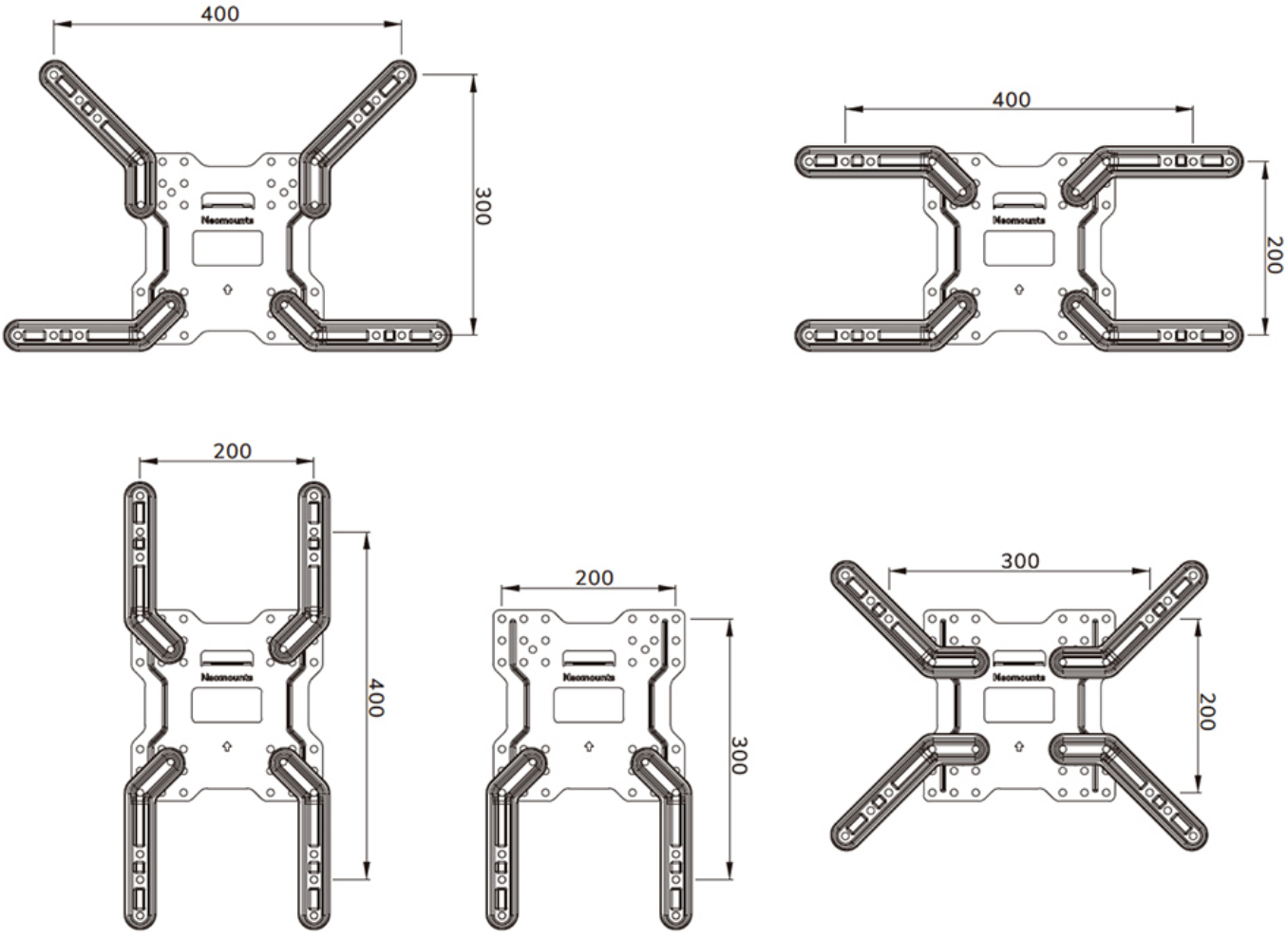

Neomounts

Measuring unit: mm