FL45-810BL1

NEOMOUNTS FL45-810BL1 TOUCH SCREEN FLOOR STAND 32-43" - TILT - BOLT-DOWN

SPECIFICATIONS

GENERAL

Min. screen size*	32
Max. screen size*	43
Min. weight	0
Max. weight	25
Screens	1
Distance to wall	16.5 cm
VESA maximum	400x400 mm
VESA minimum	100x100 mm

FUNCTIE

Type	Tilt
Lockable	Lockable - Security screw included
Tilt (degrees)	0, +35°
Height	131,3
Width	60
Depth	45
Adjustment type	Manual

INFORMATION

Color	Black
Main material	Steel
Warranty	5 year

*Please note: The inch sizes stated are just an indication, combined with the weight and VESA sizes. The maximum weight and VESA size are absolute restrictions for the products and should not be exceeded.





Neomounts FL45-810BL1 Touch screen Floor stand - 32-43" - max 25 kg - h 108 cm - VESA 100x100-400x400 - 35° tiltable - cable management incl. VESA cover - floor plate 60x45 cm (bolt-down) - black

The Neomounts FL45-810BL1 is a floor stand specifically designed for interactive touchscreens from 32" to 43", with a maximum weight capacity of 25 kg. Featuring a fixed screen center height of 108 cm and a tilt range of 0° to +35°, it allows users to comfortably view and interact with the screen. Ideal for check-in kiosks, wayfinding and interactive digital signage, the stand provides a practical solution for public spaces, reception areas, hotel lobbies and retail environments. Its aluminum column, robust steel components and matte black powder-coated finish ensure a sturdy construction with a professional appearance.

Designed for secure installation in public environments, the FL45-810BL1 features a 60x45 cm bolt-down floor plate that allows the stand to be firmly anchored to the floor. A dedicated VESA cover conceals the mounting hardware to discourage unauthorized access, while the integrated cable management system with removable cover keeps cables neatly out of sight. Compatible with VESA patterns from 100x100 to 400x400 mm, the stand combines secure mounting, comfortable touchscreen interaction and a clean, professional design.

FL45-810BL1

NEOMOUNTS FL45-810BL1 TOUCH SCREEN FLOOR STAND 32-43" - TILT - BOLT-DOWN

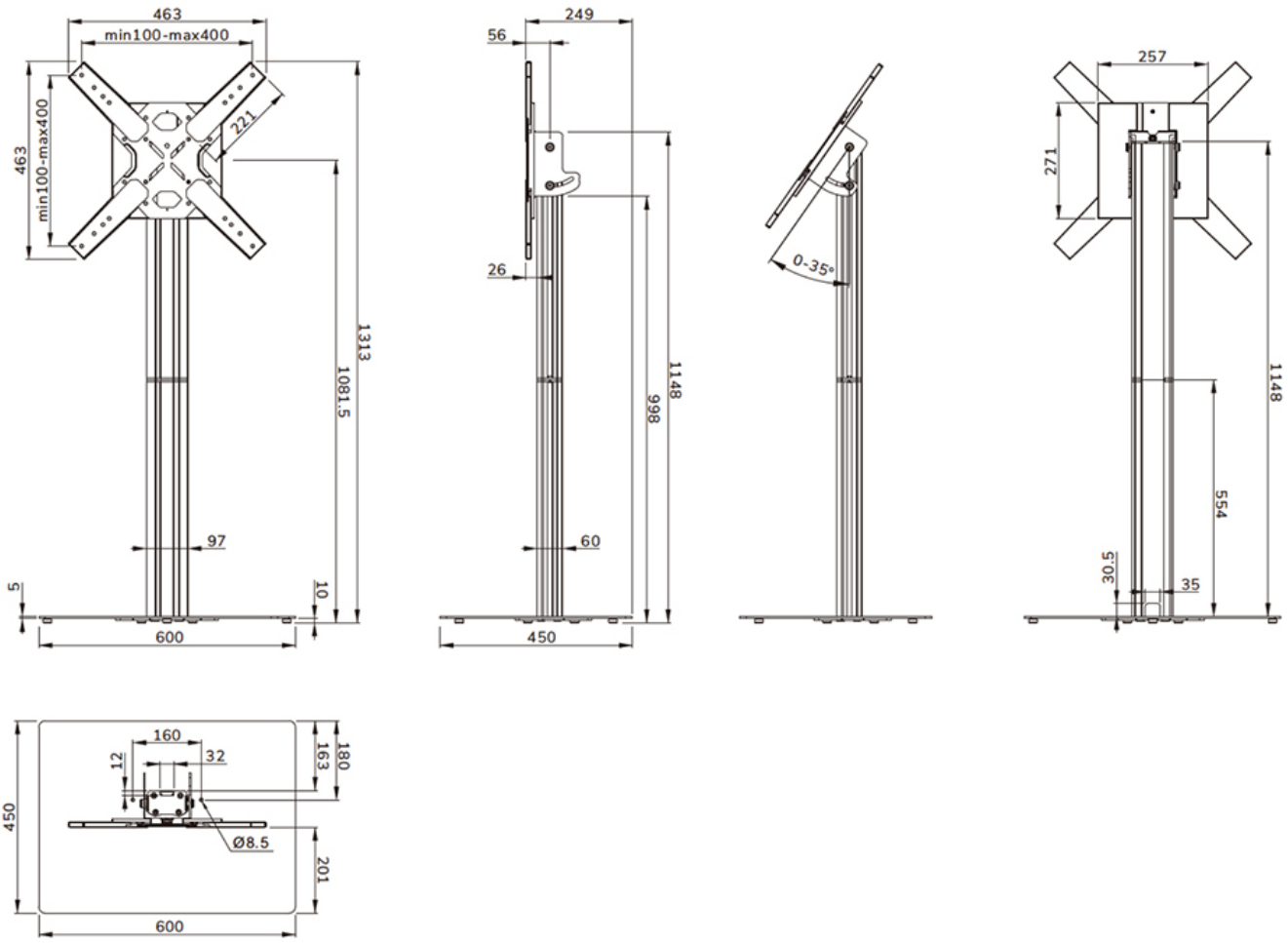

Neomounts

Measuring unit: mm