DS70PLUS-950BL1

NEOMOUNTS DS70PLUS-950BL1 MONITOR ARM 17-57" - GAS SPRING - TOPFIX - 180° STOP

SPECIFICATIONS

GENERAL

Min. screen size*	17
Max. screen size*	57
Min. weight	1
Max. weight	20
Max. weight curved/ultra-wide	16
Screens	1
Curve radius range	1000R - 4000R
Desk mount	Grommet Clamp
Distance to wall	12,8 - 66,5 cm
VESA maximum	100x100 mm
VESA minimum	75x75 mm

FUNCTIE

Type	Full motion
Height adjustment	20-52 cm
Depth adjustment	12,8 - 66,5 cm
Tilt (degrees)	+90°, -90°
Swivel (degrees)	+90°, -90°
Rotate (degrees)	+180°, -180°
Height	57.9 cm
Width	13,5 cm
Depth	66.5 cm
Adjustment type	Gas spring

INFORMATION

Color	Black
Warranty	10 year

*Please note: The inch sizes stated are just an indication, combined with the weight and VESA sizes. The maximum weight and VESA size are absolute restrictions for the products and should not be exceeded.





Neomounts NEXT One DS70PLUS-950BL1 Single monitor arm - 17-57" - max 20 kg (curved 16 kg) - gas spring - 180° stop - Topfix - Easy Install-model - toolless tilting - black

The Neomounts DS70PLUS-950BL1 is a full-motion single desk mount designed for screens up to 57" with a maximum weight capacity of 20 kg (and up to 16 kg for curved displays). Driven by a smooth gas spring arm, it allows you to effortlessly position heavy flat screens and up to 1000R curved monitors to your ultimate viewing angle. The versatile design supports both high-efficiency office workstations and demanding gaming setups, giving you complete freedom to view wide timelines, multiple windows, or rich visual content.

Engineered for optimal protection and ease of use, the arm features a built-in 180° rotation stop mechanism to safeguard walls and partition panels. Installation is fast and user-friendly with the innovative Topfix system, offering both clamp and grommet options for desk thicknesses between 10 and 55 mm. Complete with integrated cable routing for a clean workspace, it delivers a robust, space-saving solution for any high-performance setup.

DS70PLUS-950BL1

NEOMOUNTS DS70PLUS-950BL1 MONITOR ARM 17-57" - GAS SPRING - TOPFIX - 180° STOP

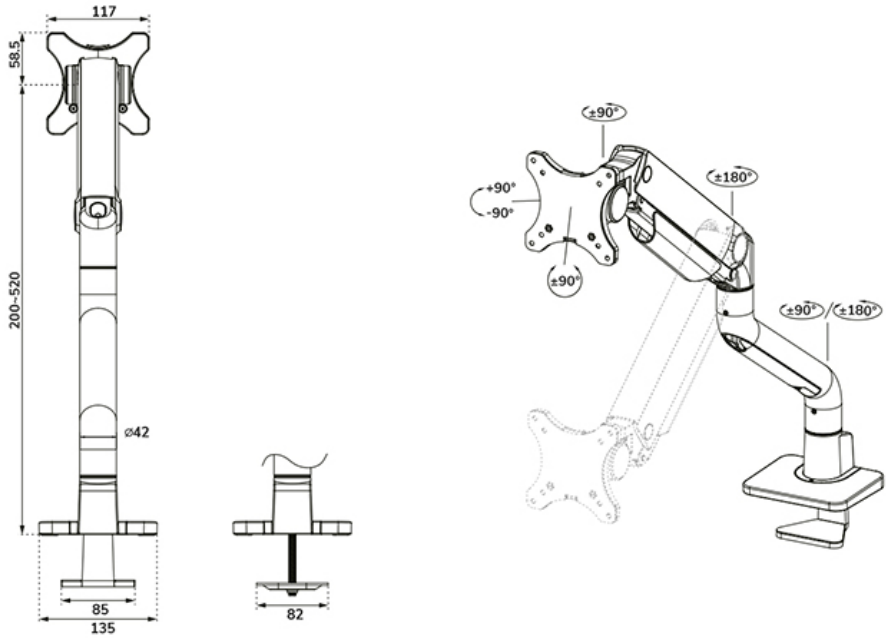

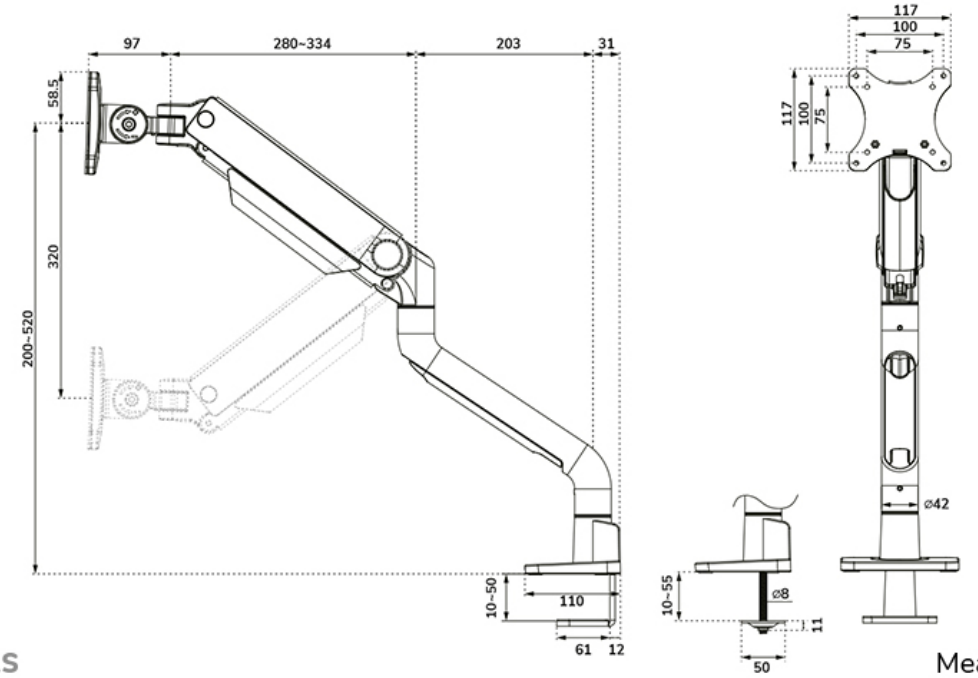

Neomounts

Measuring unit: mm