ABL-875

SPECIFICATIONS

GENERAL

FUNCTIONALITY

Adjustment type	None

INFORMATION

Series	MOVE Lift
Main material	Steel
Warranty	5 year
EAN code	8717371440916

*Please note: The inch sizes stated are just an indication, combined with the weight and VESA sizes. The maximum weight and VESA size are absolute restrictions for the products and should not be exceeded.

NEOMOUNTS ABL-875 WHEEL LOCK FOR

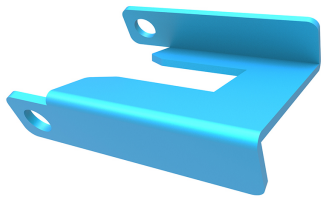

Neomounts

Neomounts

Neomounts MOVE ABL-875 Wheel lock for trolleys - lockable (excl. lock) - suitable for FL55-875BL1/WH1, FL50S-825BL1/WH1, FL50-525/575BL1/WH1

The Neomounts ABL-875 is a brake lock for the caster wheels of the FL50S-825 and FL55-875 trolleys. To prevent unwanted relocation of the trolley, the brake of the double caster wheels can be blocked using the ABL-875. The locks can be easily placed on the wheels of the trolley (padlock not included), preventing the brake from being released. The bright blue color is a clear reminder for the user that the wheel have been locked. The ABL-875 comes as a set of 2 brake locks.

ABL-875

NEOMOUNTS ABL-875 WHEEL LOCK FOR

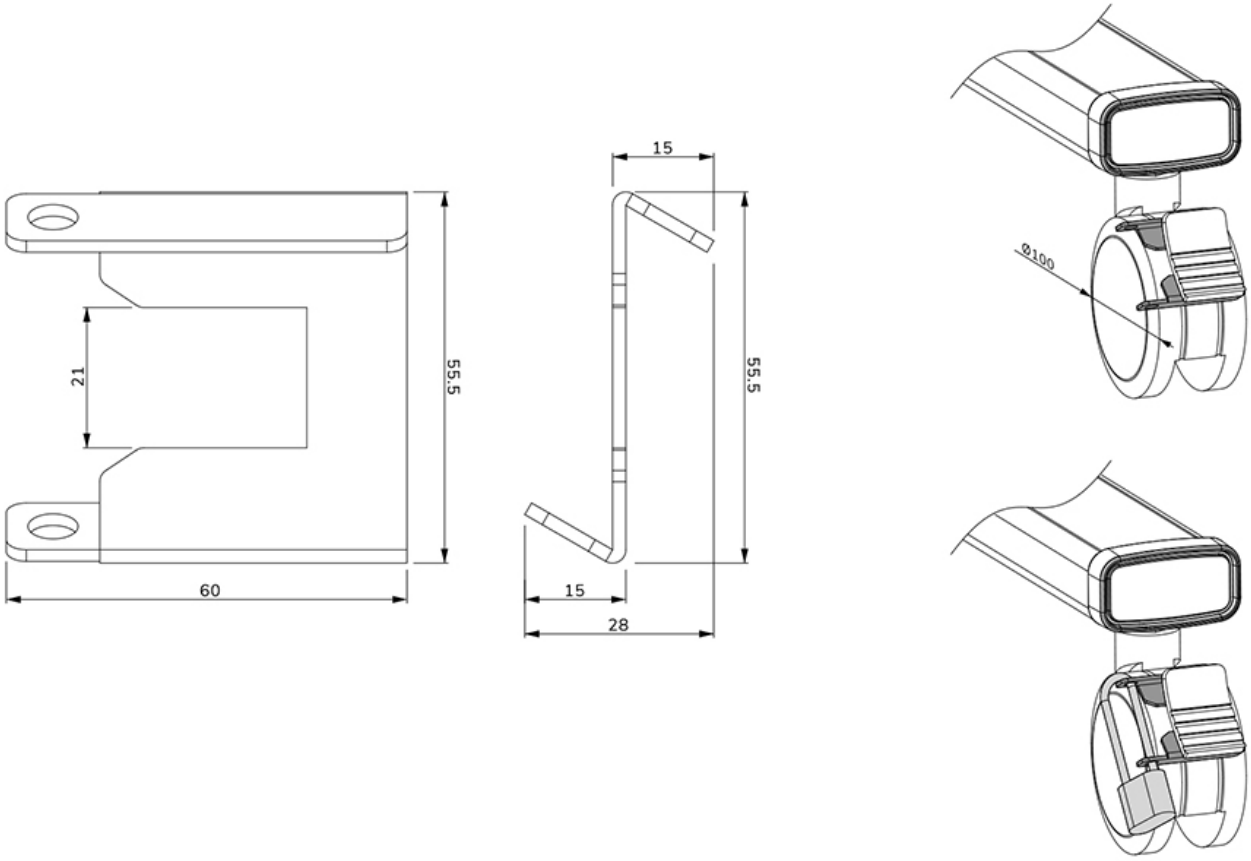

Neomounts

Measuring unit: mm